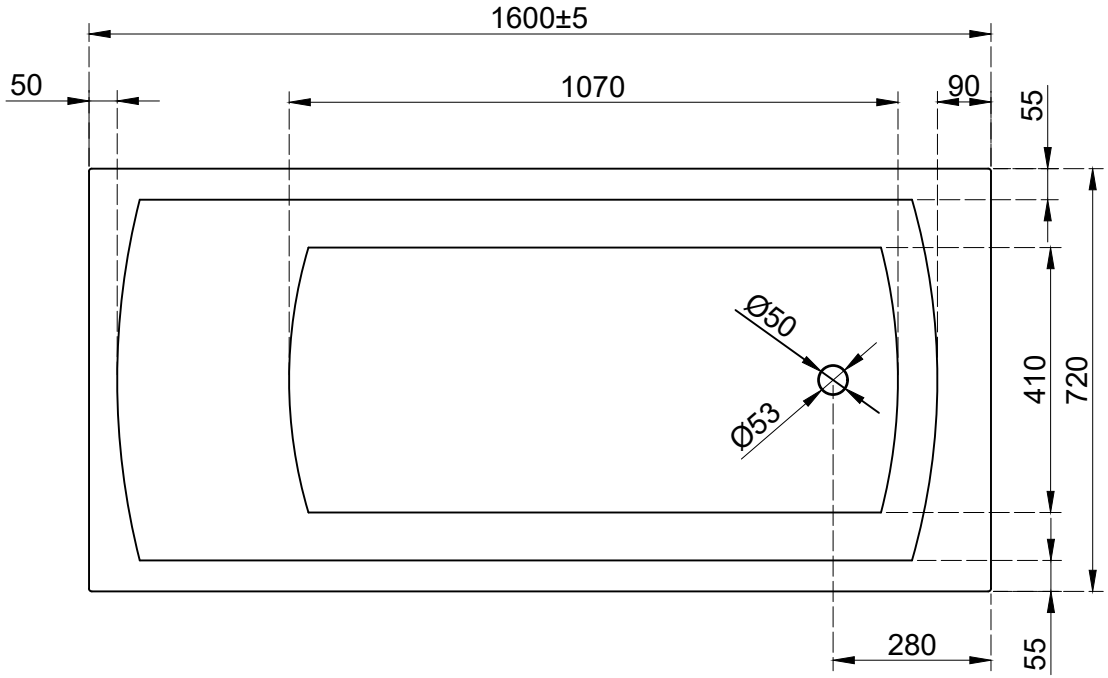

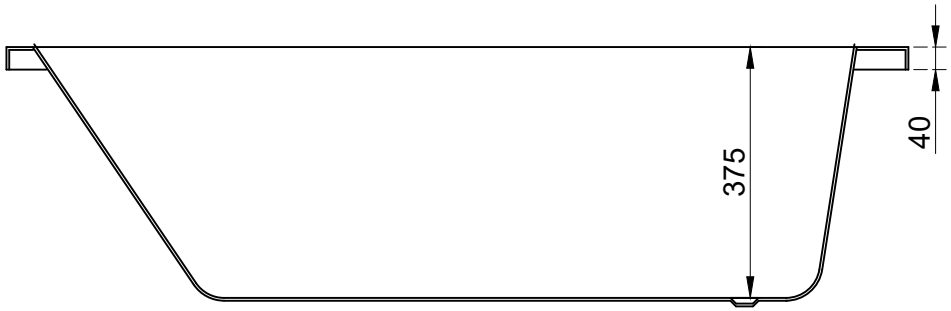

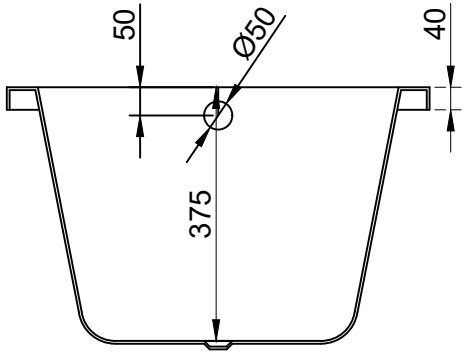

Name:	029	Numbers:		Units:	mm						
Code:		Material:		Tolerance:	±5mm	Draftsman:		revise:		Auditing:	
Dimensions:		Projection:		Proportion:	1:18	Date:		Date:		Authorize:	